LAKEWOOD NATIONAL PARK, LMRS, System Name: LAKEWOOD

LOOKOUT MTN
(REPEATER)
FBR...W110...39-43-57N/105-14-19W...FX....W5

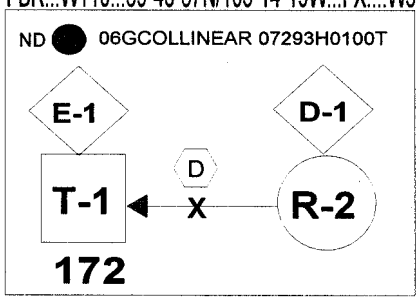

DENVER FEDERAL CENTER KAB-111
(RANGER STATION)
FB/FX...W60...39-43-19N/105-07-15W

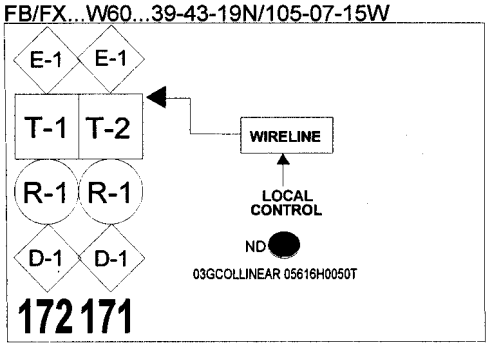

LAKEWOOD NP
(MOBILES AND PORTABLES)
ML...W50

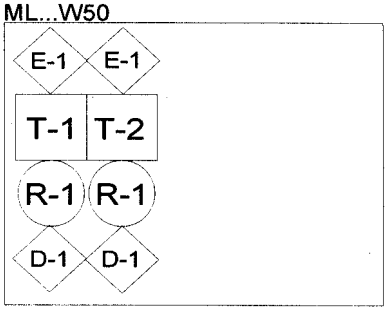

Drawn By: John Doe, FOTSC-OE (303-555-1234), Date: MM/DD/YY, Revision# ___ DWG# LAKEPG01.DW2 PG-01