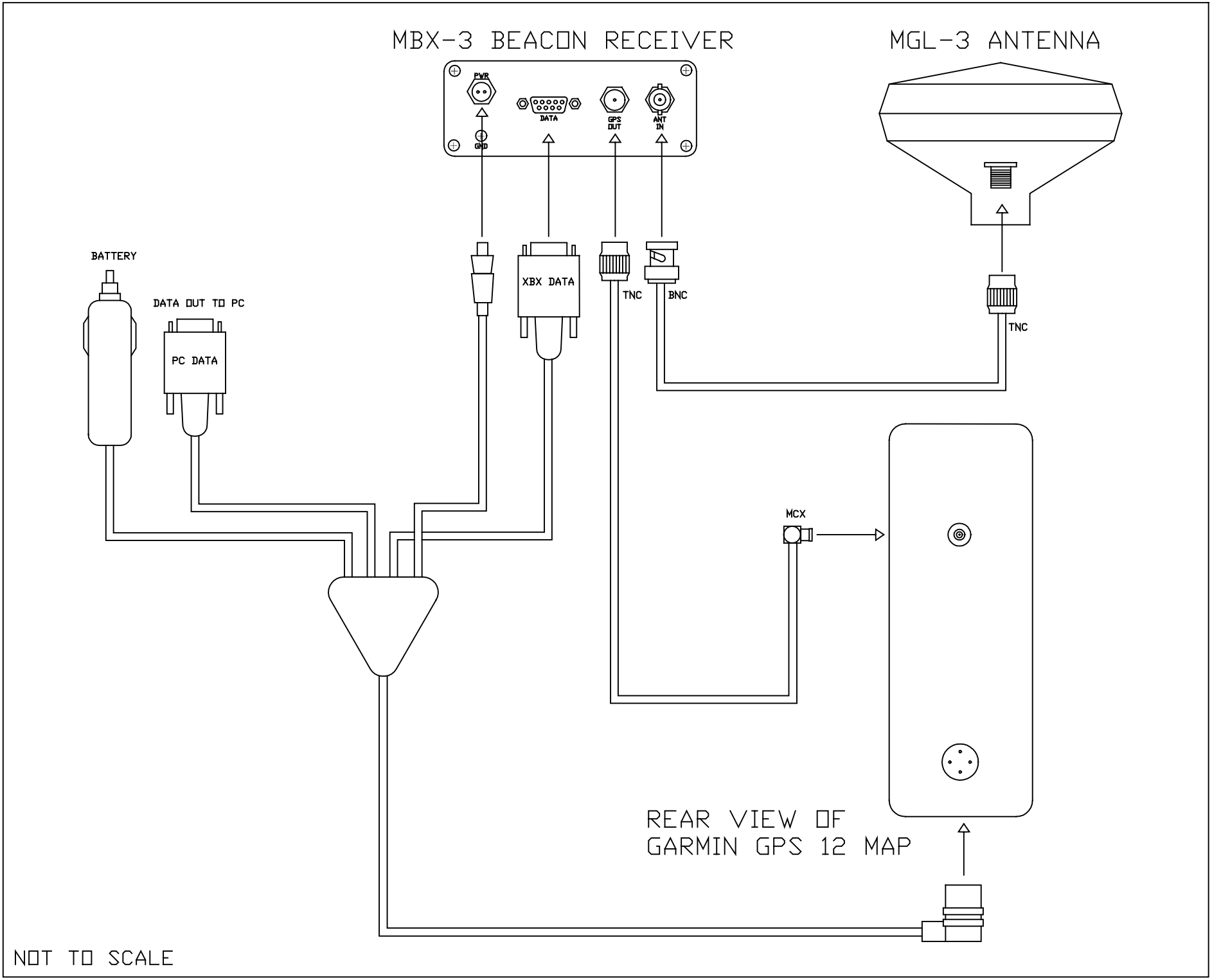
MBX-3 BEACON RECEIVER
MGL-3 ANTENNA
PWR
GND
DATA
GPS OUT
ANT IN
BATTERY
DATA OUT TO PC
PC DATA
XBX DATA
TNC
BNC
TNC
MCX
REAR VIEW OF
GARMIN GPS 12 MAP
NOT TO SCALE